Model 4403 Cold-Tank Hydrotherapy Console
A versatile and efficient hydrotherapy system for treating multiple athletes. Its stainless-steel whirlpool tank offers whole-body and extremity immersion. Water temperature is precisely maintained with an internal refrigeration system. No need to add ice. Standard protocol recommends draining and cleaning only once a week. This self-contained unit fits through a 40” x 84” door and can be installed in new or existing hydrotherapy areas with minimum site preparation.

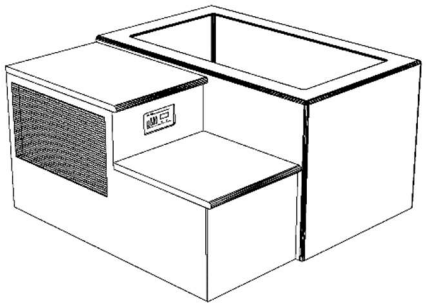

Stainless Steel Tank
Tank is 58” long, 30” wide, and 32” deep with a capacity of 207 gallons. It is formed and welded from 12-gauge Type 304 stainless steel into a seamless unit with coved corners for easy cleaning. This high-quality stainless-steel tank assures maximum sanitation and provides a lifetime of durable service.

Corian Surface
The exterior is covered with Cameo White Corian solid surface material. This comfortable and easy to clean surface is extremely durable. A wide variety of Corian colors is available to select from for the step surfaces and optional team logo inlay.

Hydrotherapy System
A dual-speed pump provides high volume circulation. Press the timer button and hydrotherapy action is delivered through six Comfort-Flo nozzles for 20 minutes. Air control activates turbo-boost for smooth, high-volume air/water flow.

Cartridge Filter
Water cleanliness and clarity is maintained with 100% circulation through a replaceable cartridge filter.

Water Level Control
A dual level automatic control maintains a constant 26” or 24” deep water level. This eliminates manual filling, replaces water volume displaced by immersion, and helps refresh the tank.

Cooling System
A self-contained air-cooled refrigeration system chills the water. The System is charged with environmentally friendly, zero ozone depletion potential, R-407A refrigerant.

Temperature Control
An electronic control accurately maintains and digitally displays water temperature and is adjustable from 40°F to 70°F. Temperature is measured and can be set to within 0.1°F. A Press-To-Set button displays the set point temperature and adjustment is made with a tamper proof screwdriver slot.

Foamed-In-Place Insulation
At least six inches of foamed-in-place polyurethane insulation surrounds and supports the tank. This exceptional insulation significantly reduces heat loss. CRYOTherm will pay for itself with energy and water savings when compared to conventional whirlpools

Installation
Delivery, installation supervision, and field-testing are included with the CRYOTherm Cold-Tank Hydrotherapy Console.

Optional
- Corian Team Logo Inlay

4403.07.30.19

Specifications

Front View

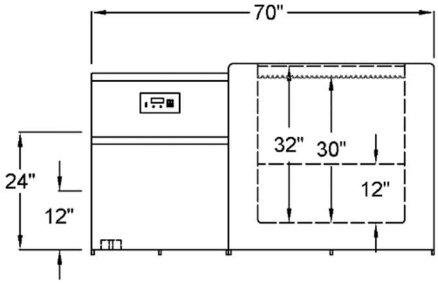

Right Side View

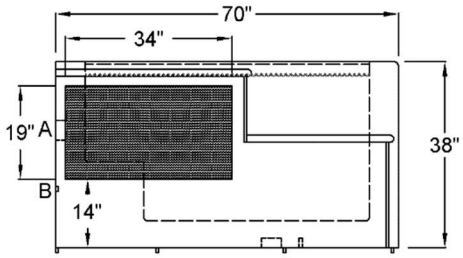

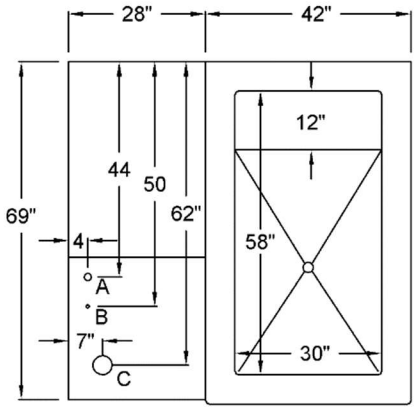

Top View

Temperature……..…..40°F to 70°F
Tank Capacity……..…..207 gal.
Weight (Filled)……..…...2,880 lb.
Weight (Empty)…….……1,150 lb.

One-Year Warranty
The CRYOTherm warranty applies to purchaser and any subsequent owner. Grimm Scientific Industries, Inc. (warrantor) warrants this product to be free from defects in material and workmanship under normal use for one year from the date the product is installed. The warrantor may opt to replace the product, rather than repair it. This warranty does not cover damage resulting from accidents, improper use, or maintenance of this product, and in no case shall warrantor's liability exceed the original purchase price paid for the product. This warranty is expressly in lieu of all other express warranties.

Contact Us:
Grimm Scientific Industries, Inc
P.O. Box 2143
Marietta, OH 45750

Phone.…800-223-5395
Fax…...…740-374-5745
E-mail….info@grimmscientific.com

FDA Listed Medical Device

ETL Certified to Meet UL 1795 Standard for Safety – Hydrotherapy Bathtubs

A = Electrical Connection

208V, 60Hz, Single Phase 4-Wire
Rating at Full Load = 24 Amp Max
* Circuit Breaker = 2-Pole, 30 Amp, GFCI
* Wall Outlet = NEMA 14-30R

(* Supplied by Customer)

B = Cold Water Supply Connection

Pipe Size = ¾ FPT Brass
Backflow Preventer = Included with CRYOTherm
Water Temperature = 45°F Min. 80°F Max.
Water Pressure = 20 PSI Min. 60 PSI Max.

C = Drain Outlet

Pipe Size = 1-1/2" Copper
Flow = 40 GPM
Floor Sink with 4-Inch drain is recommended

4403.07.30.19